HSF

NOTES:
Current Rating:0.5AMP
Contact Resistance:30mΩ max
Withstand Voltage:500V AC/DC
Insulation Resistance:100MΩ min
Operation Temperature:−20℃ to +105℃

Contact Material:Phosphor Bronze
Housing Material:PA9T(UL94V−0)
Contact plating:Au or Sn over Ni

Ordering Information

3612-S XXX - XXX XX R 01

- No.of Pins
- Housing High: Female=H2
- Contact Plating: G1=3u"Gold, G2=5u"Gold, S1=3u"Gold/Tin, S2=5u"Gold/Tin
- T=Tube, P=Tube+CAP, R=Tape&Reel+CAP

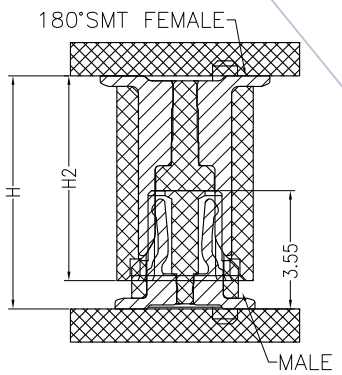

MATED DRAWING(REF.)

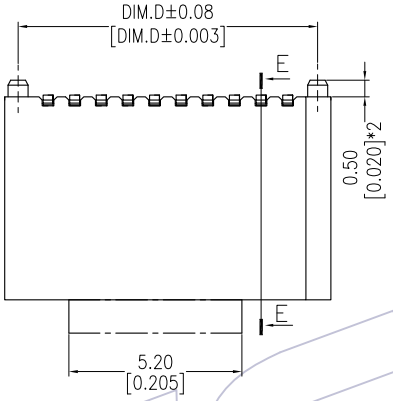

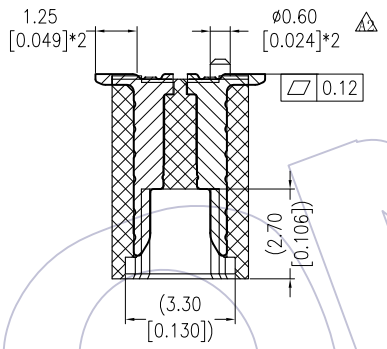

SECTION E−E
SCALE 1:1

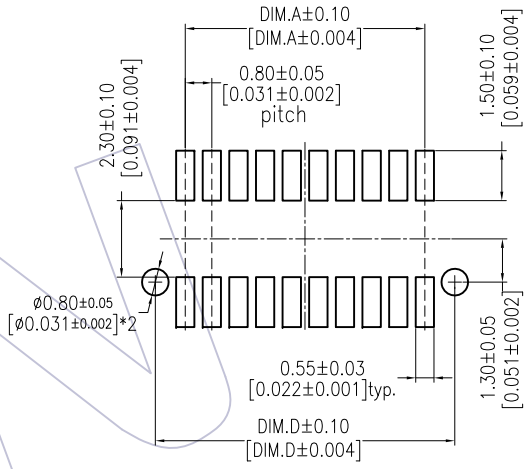

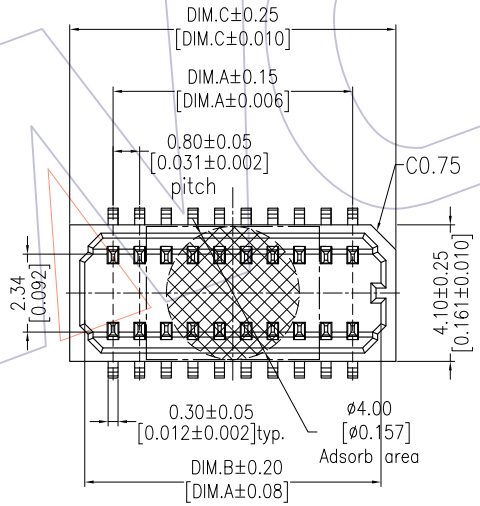

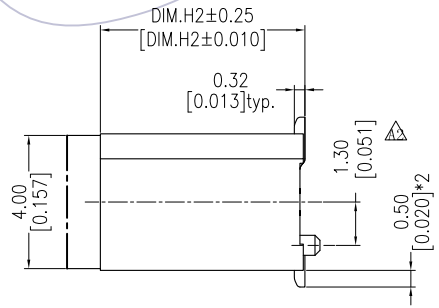

PART NO.	FEMALE(H2)
3612−SXXX−036XXR01	3.65
3612−SXXX−041XXR01	4.15
3612−SXXX−047XXR01	4.70
3612−SXXX−051XXR01	5.15
3612−SXXX−056XXR01	5.65
3612−SXXX−061XXR01	6.15

ASS'Y HEIGHT(H)	FEMALE(H2)	MALE(H1)
4.50	3.65	3.55
5.00	4.15	
5.65	4.70	
6.00	5.15	
6.50	5.65	
7.00	6.15	

DIM.D	DIM.C	DIM.B	DIM.A	PIN NO.
17.00	17.80	16.90	15.20	40
16.20	17.00	16.10	14.40	38
15.40	16.20	15.30	13.60	36
14.60	15.40	14.50	12.80	34
13.80	14.60	13.70	12.00	32
13.00	13.80	12.90	11.20	30
12.20	13.00	12.10	10.40	28
11.40	12.20	11.30	9.60	26
10.60	11.40	10.50	8.80	24
9.80	10.60	9.70	8.00	22
9.00	9.80	8.90	7.20	20
8.20	9.00	8.10	6.40	18
7.40	8.20	7.30	5.60	16
6.60	7.40	6.50	4.80	14
5.80	6.60	5.70	4.00	12
5.00	5.80	4.90	3.20	10

Recommended P.C.B Layout(Top Side)
(PCB BOARD TOLERANCE±0.05)

REV	DATE	MODIFICATION DESCRIPTION	CHANGE
A2	2015/12/29	内柱位置:1.20 → 1.30 大小:⌀0.75 →⌀0.60	2
A1	2013/05/02	Modify	1
A0	2013/03/22	NEW	—

OPERATION	
X.X	±0.40
X.XX	±0.25
X.XXX	±0.15
Angle	± 3°
DIM	TOL

DRAW	JYHuang	DATE	2015/12/29
CHECK		DATE	
APPROVE		DATE	

SCALE	FIT
UNIT	mm / inch
SIZE	A4
SHEET	1/1
PROJ.	

PART NO. 3612-SXXX-XXXXXR01

TITLE: 0.80mm B TO B "M" FEMALE 180° SMT TYPE

Customer NO.

WCON
Http: www.wcon.com

WCON−Dongguan
Tel: +86 769 85358920
Fax: +86 769 85358915
E-mail: sales@wcon.com

WCON−Kunshan
Tel: +86 512 57468408
Fax: +86 512 57468468
E-mail: salesks@wcon.com