HSF

NOTES:
Current Rating: 3.0AMP
Contact Resistance: 20mΩ Max
Withstand Voltage: 1000V AC/DC
Insulation Resistance: 1000MΩ Min
Operation Temperature: −40℃ to +105℃

Contact Material:Brass
Contact plating:Au over Ni
Insulator Material:PBT+30%G.F UL94V−0

10P−18P With "C", Without "D",
20P−64P With "C" and "D".

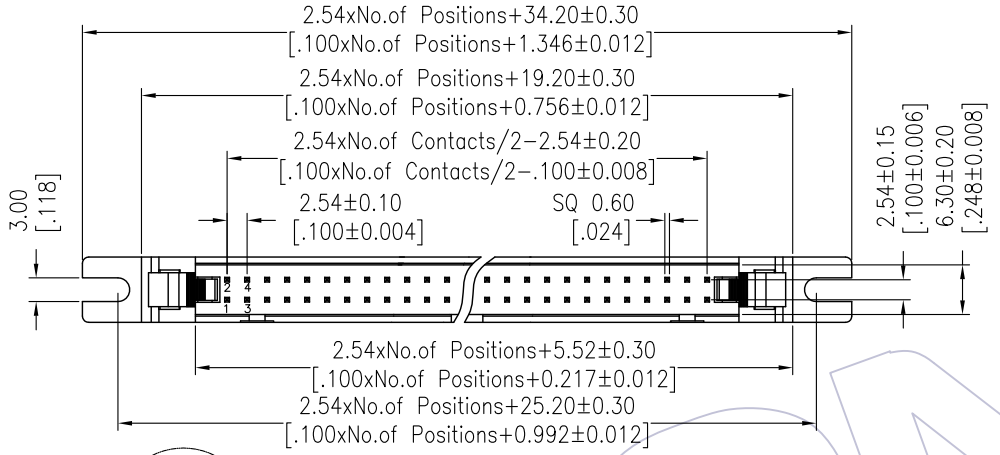

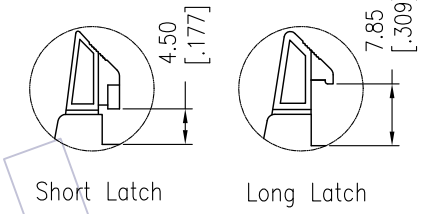

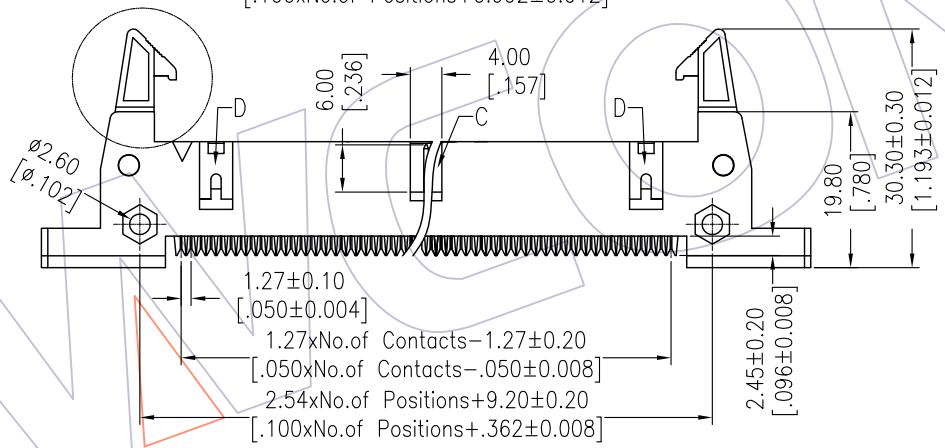

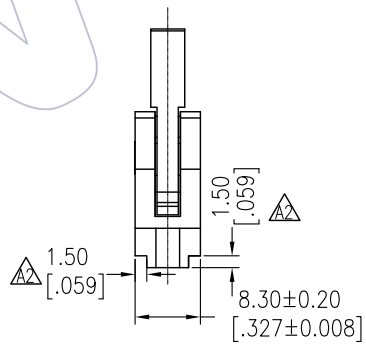

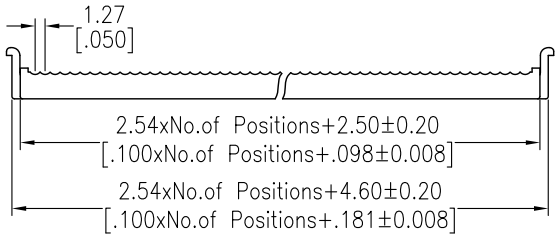

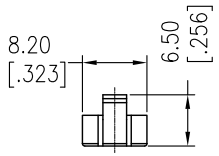

Ordering Information

3820- XX XX W X X 01

No.of Pins	Contact Plating	Insulator Color	Latch Type
10 30	S0=Gold Flash/Ni	G=Grey(427C)	L=Long Latch
14 34	S3=10u"Gold/Ni	E=Grey(413C)	S=Short Latch
16 40	S4=15u"Gold/Ni	B=Black	N=Without Latch
20 50	S5=30u"Gold/Ni A1	U=Blue	
26 60			
64			

Item	Pitch	Mating
Standard	2.54	5212
Alternate		

REV	DATE	MODIFICATION DESCRIPTION	CHANGE
A2	2017/03/15	Modify	------
A1	2012/11/22	Modify The Contact Plating	------
A0	2012/10/08	NEW	------

OPERATION	
X.X	±0.40
X.XX	±0.25
X.XXX	±0.15
Angle	± 3°
DIM	TOL

DRAW	Surong Xu	DATE	2017/03/15
CHECK		DATE	
APPROVE		DATE	

SCALE	FIT
UNIT	mm
SIZE	A4
SHEET	1/1
PROJ.	

PART NO. 3820−XXXXWXX01

TITLE: 2.54mm EJECTOR HEADER IDC TYPE

Customer NO.

WCON
Http: www.wcon.com

WCON−Dongguan
Tel: +86 769 85358920
Fax: +86 769 85358915
E−mail: sales@wcon.com

WCON−Kunshan
Tel: +86 512 57468408
Fax: +86 512 57468468
E−mail: salesks@wcon.com